Solalighting Ltd
Sola House
17 High Street
Olney
Buckinghamshire MK46 4EB
Tel: 01234 241466 Fax: 01234 241766
e-mail: info@solaconcepts.co.uk
website: www.solaconcepts.co.uk

BBA APPROVAL INSPECTION TESTING CERTIFICATION
TECHNICAL APPROVALS FOR CONSTRUCTION

Agrément Certificate
08/4597
Product Sheet 1

SOLATUBE TUBULAR DAYLIGHTING SYSTEMS

SOLATUBE 160DS AND 290DS DAYLIGHTING SYSTEMS

PRODUCT SCOPE AND SUMMARY OF CERTIFICATE

This Certificate relates to the Solatube 160DS and 290DS Daylighting Systems, for use on roofs of domestic and commercial buildings, to provide natural light inside the buildings.

AGRÉMENT CERTIFICATION INCLUDES:

- factors relating to compliance with Building Regulations where applicable
- factors relating to additional non-regulatory information where applicable
- independently verified technical specification
- assessment criteria and technical investigations
- design considerations
- installation guidance
- regular surveillance of production
- formal three-yearly review.

KEY FACTORS ASSESSED

Light transmittance — when installed in accordance with the manufacturer's instructions the systems will transmit natural light through the attic space into a ceiling below (see section 5).

Strength and stability — the systems can be selected to have adequate resistance to wind loads calculated in accordance with BS 6399-2 : 1997 (see section 6).

Weathertightness — when installed in accordance with the manufacturer's instructions and this Certificate, the systems will provide a weatherproof construction (see section 7).

Behaviour in relation to fire — the polycarbonate dome used in the skylights may be classified as Tp(a) rigid and the polycarbonate diffuser classified as Tp(b) rigid or semi-rigid in accordance with the national Building Regulations. Aluminium and aluminium coated steel flashing materials can be considered as non-combustible (see section 8).

Hygrothermal properties — the 160DS and 290DS can achieve a U value of 2.2 $Wm^{-2}K^{-1}$ or better (see section 9).

Durability — the systems should have a life of at least 10 years (see section 12).

The BBA has awarded this Agrément Certificate to the company named above for the systems described herein. These systems have been assessed by the BBA as being fit for their intended use provided they are installed, used and maintained as set out in this Certificate.

On behalf of the British Board of Agrément

Date of First issue: 22 December 2008

Chris Hunt
Head of Approvals — Physics

Greg Cooper
Chief Executive

The BBA is a UKAS accredited certification body — Number 113. The schedule of the current scope of accreditation for product certification is available in pdf format via the UKAS link on the BBA website at www.bbacerts.co.uk

Readers are advised to check the validity and latest issue number of this Agrément Certificate by either referring to the BBA website or contacting the BBA direct.

British Board of Agrément
Bucknalls Lane
Garston, Watford
Herts WD25 9BA
tel: 01923 665300
fax: 01923 665301
e-mail: mail@bba.star.co.uk
website: www.bbacerts.co.uk

©2008

Regulations

In the opinion of the BBA, the Solatube 160DS and 290DS Daylighting Systems, if used in accordance with the provisions of this Certificate, will meet or contribute to meeting the relevant requirements of the following Building Regulations:

The Building Regulations 2000 (as amended) (England and Wales)

Requirement:	A1	Loading
Comment:		When installed in accordance with the provisions of this Certificate, the systems will have sufficient strength and stiffness to sustain the design load. See sections 6.1 and 6.2 of this Certificate.
Requirement:	B2	Internal fire spread (linings)
Comment:		The diffuser can be classified as Tp(b) material and can meet this Requirement. See section 8.1 of this Certificate.
Requirement:	B4(2)	External fire spread
Comment:		The dome can be classified as Tp(a) rigid material and can meet this Requirement. See sections 8.1 and 8.2 of this Certificate.
Requirement:	C2(b)(c)	Resistance to moisture
Comment:		When installed in accordance with this Certificate, the systems will not adversely affect the resistance of the roof to the passage of moisture. See sections 7.1 and 7.2 of this Certificate. The systems can contribute to minimising the risk of condensation. See sections 9.2 and 9.3 of this Certificate.
Requirement:	L1(a)(i)	Conservation of fuel and power
Comment:		The systems are acceptable. See section 9.1 of this Certificate.
Requirement:	Regulation 7	Materials and workmanship
Comment:		The systems are acceptable when used in accordance with this Certificate. See section 12 and the *Installation* part of this Certificate.

The Building (Scotland) Regulations 2004 (as amended)

Regulation:	8(1)(2)	Fitness and durability of materials and workmanship
Comment:		The systems can contribute to a construction meeting this Regulation. See sections 11.1, 11.2 and 12 and the *Installation* part of this Certificate.
Regulation:	9	Building standards — construction
Standard:	1.1(a)(b)	Structure
Comment:		When used in accordance with the provisions of this Certificate, the systems will have sufficient strength and stiffness to sustain design loads depending on the geographical location, with reference to clause 1.1.2[(1)(2)]. See sections 6.1 and 6.2 of this Certificate.
Standard:	2.5	Internal linings
Comment:		The diffuser can be classified as Tp(b) semi-rigid material and can be used in accordance with the area and separation distances required by clause 2.5.7[(1)(2)]. See section 8.1 of this Certificate.
Standard:	2.8	Spread from neighbouring buildings
Comment:		The external dome is assessed as having low vulnerability and is subject to limitations with respect to proximity to boundaries in accordance with clause 2.8.1[(1)(2)]. See sections 8.1 and 8.2 of this Certificate.
Standard:	3.10	Precipitation
Comment:		When installed in accordance with the provisions stated in this Certificate, the systems will not adversely affect the resistance of the roof to the passage of moisture, with reference to clause 3.10.1[(1)(2)]. See sections 7.1 and 7.2 of this Certificate.
Standard:	3.15	Condensation
Comment:		The systems can contribute to minimising the risk of condensation, with reference to clauses 3.15.4[(1)] and 3.15.5[(1)]. See sections 9.2 and 9.3 of this Certificate.
Standard:	3.16	Natural lighting
Comment:		The systems can contribute to providing natural light to a building, with reference to clauses 3.16.1[(1)] and 3.16.3[(1)]. See sections 5.1 and 5.2 of this Certificate.
Standard:	6.1(b)	Carbon dioxide emissions
Standard:	6.2	Building insulation envelope
Comment:		The systems are acceptable. See section 9.1 of this Certificate.
		(1) Technical Handbook (Domestic).
		(2) Technical Handbook (Non-Domestic).

The Building Regulations (Northern Ireland) 2000 (as amended)

Regulation:	B2	Fitness of materials and workmanship
Comment:		The systems are acceptable when used in accordance with this Certificate. See section 12 and the *Installation* part of this Certificate.
Regulation:	B3(2)	Suitability of certain materials
Comment:		The systems are acceptable. See sections 11.1 and 11.2 of this Certificate.
Regulation:	C4	Resistance to ground moisture and weather
Comment:		When installed in accordance with the provisions stated in this Certificate, the systems will not adversely affect the resistance of the roof to the passage of moisture. See sections 7.1 and 7.2 of this Certificate.

Regulation:	C5	Condensation
Comment:		The systems can contribute to minimising the risk of condensation. See sections 9.2 and 9.3 of this Certificate.
Regulation:	D1	Stability
Comment:		When installed in accordance with the provisions of this Certificate, the systems will have sufficient strength and stiffness to sustain the design loads. See sections 6.1 and 6.2 of this Certificate.
Regulation:	E3(a)	Internal fire spread — Linings
Comment:		The diffuser can be classified as Tp(b) material. See section 8.1 of this Certificate.
Regulation:	E5(b)	External fire spread
Comment:		The dome can be classified as Tp(a) rigid material. See sections 8.1 and 8.2 of this Certificate.
Regulation:	F2(a)(i)	Conservation measures
Regulation:	F3	Target carbon dioxide Emissions Rate
Comment:		The systems are acceptable. See section 9.1 of this Certificate.

Construction (Design and Management) Regulations 2007
Construction (Design and Management) Regulations (Northern Ireland) 2007

In the opinion of the BBA, there is no information in this Certificate which relates to the obligations of the client, CDM co-ordinator, designer and contractors under these Regulations.

Non-regulatory Information

NHBC Standards 2008

NHBC accepts the use of the Solatube 160DS and 290DS Daylighting Systems, when installed and used in accordance with this Certificate, in relation to NHBC Standards, Chapter 7.2, *Pitched roofs*.

Zurich Building Guarantee Technical Manual 2007

In the opinion of the BBA, the Solatube 160DS and 290DS Daylighting Systems, in relation to this Certificate, is not subject to the requirements of this Technical Manual.

General

This Certificate relates to the Solatube[1] 160DS and 290DS Daylighting Systems, a complete roof-to-ceiling skylight system incorporating a polycarbonate dome fitted onto a metal upstand attached to a reflective, rigid aluminium light pipe providing natural light to a diffuser in the ceiling below. The rigid light pipe has various angled sections to direct the light through the attic space.

The systems are for use on roofs of domestic and commercial buildings, to provide natural light inside the buildings.

It is important that the designers, planners, contractors and/or installers ensure that the system is installed and used in accordance with the Certificate holder's instructions and the information given in the *Design Considerations* and *Installation* parts of this Certificate.

(1) Registered trademark.

Technical Specification

1 Description

1.1 The Solatube 160DS and 290DS Daylighting Systems are available as a kit of parts and makes up into a roof-to-ceiling daylight pipe available in two sizes — 250 mm and 350 mm diameters (see Figure 1). The components include:

- dome — transparent injection moulded polycarbonate greater than 3 mm thick, coated with an ultraviolet (UV) stabiliser. 160DS (250 mm) and 290DS (350 mm) models have Raybender[1] 3000 dome technology — a series of Fresnel lenses that refract low-level light into the tube section. Both models feature patented LightTracker[2] dome technology — a reflector unit positioned at the back of the dome to reflect in more low-level light into the system.
- roof flashing 160DS and 290DS — to suit specific roof type
  - — flat roofs (metal, membrane, bituminous) — galvanized steel, powder coated
  - — slate and plain tile roofs (metal, membrane, bituminous) — galvanized steel, powder coated
  - — interlocking concrete tiles — aluminium sheet with rigid aluminium upstand
- top tube assembly 160DS and 290DS
  - — reflective 300 mm long aluminium tubing with Spectralight[1] Infinity laminated coating incorporating 0–30° adjustable angle that twists to the required angle in order to accommodate different roof pitches and to route tubing around obstacles in the attic space. The top of the tube has a polycarbonate dome ring with snap fit fixings to accommodate the roof dome

Figure 1 Semi-exploded view of 250 mm and 350 mm application

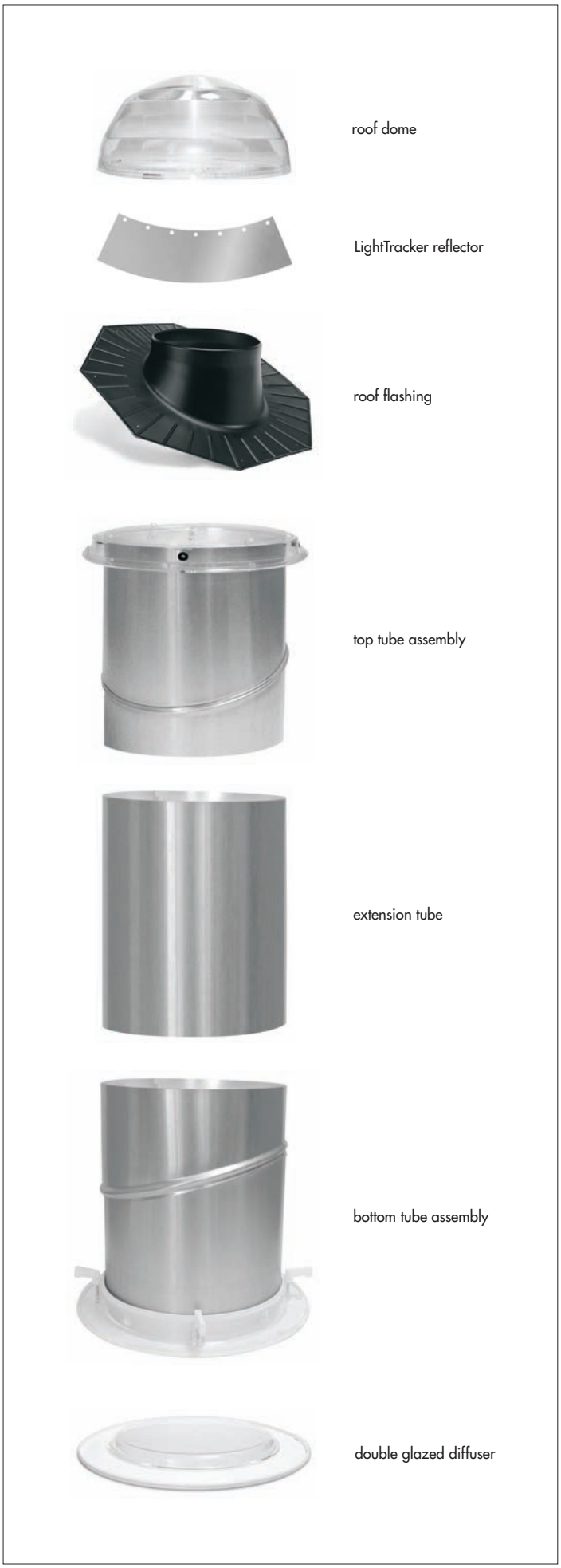

- extension tubes 160DS and 290DS
  - reflective 610 mm long aluminium tubing with Spectralight Infinity laminated coating incorporating locating slots for parallel or tapered assembly
  - 0–90° angle section, 580 mm long aluminium tubing with Spectralight Infinity laminated coating incorporating 3 x 0–30° variable joints which can be arranged to provide a variety of angles and configurations
- bottom tube assembly 160DS and 290DS
  - reflective 305 mm long aluminium tubing with Spectralight Infinity laminated coating incorporating 0–30° adjustable angle. The base of the unit is fitted with a white acrylic ceiling ring with (four) integral twist-lock ceiling-fixing mechanism
- diffuser 160DS and 290DS
  - Optiview [1] — injection-moulded, acrylic dress ring and double-glazed polycarbonate Fresnel lens
- fixings 160DS and 290DS (250 mm and 350 mm)
  - dome screws
  - flashing screws
  - flashing fixings (as appropriate to type)
  - drywall mounting screws
  - tube screws
  - expansion joint seal — self-adhesive nylon brush seal
  - aluminium joint-sealing tape
  - flashing sealant as required.

(1) Registered trademark.
(2) Trademark.

1.2 The product is available in a range of sizes (see Table 1).

Table 1 Sizes

Product code	Tube diameter (mm)
160DS	250
290DS	350

2 Delivery and site handling

2.1 The Certificate holder's recommendations for site handling and installation are provided with each delivery.

2.2 The systems are delivered to site in kit form, wrapped in bubble wrap protective sheet and boxed ready for installation. Each box carries a sticker bearing the customer's name, details, order number and delivery documentation.

Assessment and Technical Investigations

The following is a summary of the assessment and technical investigations carried out on the Solatube 160DS and 290DS Daylighting Systems.

Design Considerations

3 Use

3.1 The Solatube 160DS and 290DS Daylighting Systems is suitable for use on pitched and flat roofs of domestic or commercial buildings.

3.2 Principally, two variations of pitched roof flashings exist in which the roof flashings are manufactured differently to allow for tiles or slates. In addition to this, separate roof flashings are available for flat felt roofs (see Figure 2).

Figure 2 Roof style configurations

flat roof

slate/plain tile

interlocking tile

3.3 The systems are suitable for most existing pitched, tiled or flat roofs. The minimum pitch for a tile or slate roof is 15° and the maximum is 65°. Other custom-designed flashings are available from the Certificate holder for pitches of 66° to 90°, but these are outside the scope of this Certificate. Cutting of structural members of the roof should be avoided, but where it is necessary, it is important that the roof is checked by a suitably qualified person.

3.4 The reflecting light pipes are designed to extend through the roof space into the diffuser in the ceiling below. Tubes in the top roof assembly and the bottom assembly are designed with an angle converter which is a rotating section set at an offset in the tube to allow for any angle of tubing through the roof space. Straight extension tubes are available for greater roof spaces. The straighter the light pipe, the more light is transmitted. Complex arrangements are not recommended due to loss of light transmission.

4 Practicability of installation

The systems are practicable to install using the methods and procedures described in this Certificate and in accordance with the recommendations given in the Certificate holder's installation guide.

5 Light transmittance

5.1 For design purposes, the approximate light transmission characteristics at normal incidence are given in Table 2.

Table 2 Light transmission

Material	Light transmission[1] (%)	Haze (%)
Clear dome (with Raybender lenses 250 mm or 350 mm)	95	86
Flush Optiview[2] diffuser	90	94[3]

(1) In accordance with ASTM D 1003 : 2000.
(2) Registered trademark.
(3) Results are due to the prismatic nature of the diffuser.

5.2 For design purposes the loss in light due to changes in angles of the light pipes is shown in Table 3.

Table 3 Loss in light due to changes in angle (250 mm skylight)

Angle of tube[1] (±5°)	% Light transmission (±5%)
180	100
152	62
123	53
Staggered as in Certificate holder's installation guide	55

(1) See Figure 3.

Figure 3 Illustration of various light angles tested

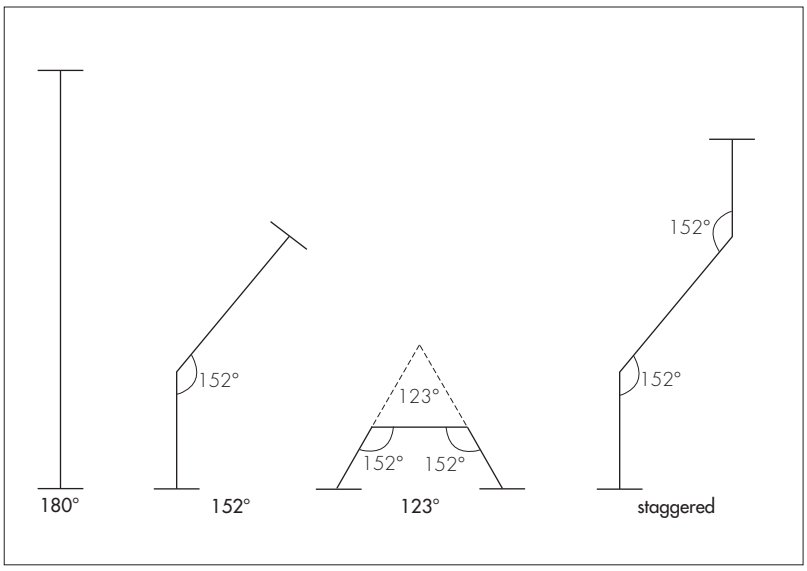

5.3 The mean reflectance of the light pipe between the wavelengths λ 400–700 nm was found to be 100%. The specular gloss, according to BS EN ISO 2813 : 2000, was found to be 151 gloss units at 85°.

5.4 When a reflector is inserted in the dome with the reflective side due south, the low light captured is improved.

6 Strength and stability

6.1 The systems have an adequate resistance to wind loads calculated in accordance with BS 6399-2 : 1997.

6.2 The systems are designed to support an imposed load of 1.1 kN. The magnitude of the actual snow load imposed will depend upon a number of factors, such as height above sea level, geographical location, roof arrangement, type and configuration of skylights. Therefore, BS 6399-3 : 1988 should be used to calculate the actual snow load when the roof is used in situations where a load greater than 1.1 kN can be expected.

6.3 Details of the connections between the flashing and the roof must be entrusted to a suitably-qualified person. Guidance is available from the Certificate holder.

6.4 The polycarbonate dome material has a good resistance to impact from hard bodies, such as hailstones, or impacts due to vandalism. Tests on typical rooflight samples showed that an impact energy of 2.5 J did not cause damage when applied at various points of the skylight dome.

7 Weathertightness

7.1 When installed in accordance with the manufacturer's instructions and this Certificate, the systems will provide a weatherproof construction.

7.2 Particular attention must be paid to the correct fitting of all components and to the detailing of sealants and roofing materials.

8 Behaviour in relation to fire

8.1 The polycarbonate dome used in the rooflights may be classified as Tp(a) rigid and the polycarbonate diffuser classified as in accordance with the national Building Regulations:

England and Wales — Approved Document B [Tp(b)]

Scotland — Technical Standards, Part 2 [Tp(b) semi-rigid]

Northern Ireland — Technical Booklet E [Tp(b)].

8.2 Aluminium coated steel roof flashing material and aluminium rigid light pipe material can be considered as non-combustible.

9 Hygrothermal properties

9.1 For buildings subject to national Building Regulations, the U value of the system should be taken into account when estimating area weighted U value requirements or glazing area provisions for doors, windows and rooflights. The area weighted U value should be 2.7 $Wm^{-2}K^{-1}$ or better. Individual element U values should not exceed 3.8 $Wm^{-2}K^{-1}$ as adjusted for roof angle as described in *Conventions for U value calculations* (2006) BRE. The system U values and areas are given in Table 4 and may be used in SAP or SBEM.

Table 4 System U values and minimum surface temperature factors

Product code	Diffuser area $A_{diffuser}$ (m^2)	No tube insulation		With tube insulation[1]	
		$U_{diffuser}$ ($Wm^{-2}K^{-1}$)	Minimum surface temperature factor, f_{si}	$U_{diffuser}$ ($Wm^{-2}K^{-1}$)	Minimum surface temperature factor, f_{si}
160DS	0.08	2.1	0.72	1.9	0.75
290DS	0.14	2.2	0.71	2.0	0.74

(1) 25 mm mineral wool tube wrap.

9.2 The risk of condensation forming on an internal surface of the diffuser is dependent on its temperature and the temperature and humidity of the adjacent air. The risk will be minimal when the system's minimum surface temperature factor exceeds that shown in Table 5, for the relevant building type. Where the tube passes through an unheated space, it should be sheathed with insulation having a thermal resistance of at least 0.6 m^2KW^{-1}[1].

(1) BR 262 : 2002 *Thermal Insulation : Avoiding Risks.*

Table 5 Minimum temperature factors[1] to minimize the risk of surface condensation

Humidity class	Building type	Temperature factors for 20°C internal temperature and humidity range in Figure A.1 of EN ISO 13788 (Section 5.4)
1	Storage areas	≤0.20
2	Office, shops	0.21–0.40
3	Dwellings with low occupancy	0.41–0.57
4	Dwellings with high occupancy, sports halls, kitchens, canteens; buildings heated with unflued gas heaters	0.58–0.71
5	Special buildings, eg laundry, brewery, swimming pools	≥0.72

(1) The ratio of temperature drop between the internal diffuser surface and the external environment and the total temperature drop between internal and external environments.

9.3 Thermal modelling of the systems are in accordance with BS EN ISO 10211-1 : 1996 and BS EN ISO 10211-2 : 2001 indicates the minimum temperature factors shown in Table 4.

9.4 Where the temperature factors in Table 4 are less than those in Table 5 for the relevant activity, there is a risk of surface condensation forming. However, limited intermittent condensation, appearing initially on the frame or glazing, should not be detrimental to the system. By way of comparison, minimum temperature factors for typical PVC-U windows are between 0.50 and 0.65.

9.5 In all cases the risk of surface condensation can be reduced by limiting activities which produce large amounts of moisture and providing means for adequate ventilation.

10 Safety

10.1 If the systems are located on a roof which is generally accessible to the public, provision must be made to prevent people falling onto the glazed part (eg guard rails). If, as the result of an accidental fall, contact is made with the polycarbonate skylight, the material shows good resistance to impact.

10.2 When subjected to normal atmospheric agents, movement of the structure, hygrothermal stresses, or vibrations, the polycarbonate skylight will not collapse or result in falling debris that would cause injury to occupants or passers-by.

11 Maintenance

11.1 If damage occurs, the systems can be re-glazed and the fixings replaced, but these operations should be carried out using the materials covered by this Certificate.

11.2 Cleaning of the diffuser or dome should be carried out using water containing mild household detergent. To avoid scratching the surface, only soft cloths should be used when cleaning.

12 Durability

Available test data and knowledge of the materials suggest that the systems, when installed in accordance with this Certificate, should have a life of at least 10 years. Minor changes in surface appearance and a reduction in light transmission of the polycarbonate domed material may occur during this period.

Installation

13 General

Installation of the Solatube 160DS and 290DS Daylighting Systems should be carried out in accordance with the Certificate holder's installation instructions.

14 Procedure

14.1 A minimum clearance is needed between joists, of 275 mm for the Solatube 160DS and 375 mm for the Solatube 290DS in order to install the ceiling diffuser. It is practicable to choose a location providing the straightest route from ceiling diffuser to dome.

14.2 The roof flashing can be positioned either vertically above the diffuser position or to an angle of up to 30° from the vertical. The two angle adaptors can be rotated in any direction to achieve this (see Figure 4).

14.3 A circular hole is cut into the ceiling of the appropriate size and the bottom tube assembly is inserted up into the ceiling. If the installation is not vertical the angle adaptor is rotated to point towards the roof flashing location. Two of the twist-lock fastening clamps in the assembly are rotated and tightened to temporarily attach the tube assembly to the ceiling (see Figure 5).

14.4 The installation of the roof flashing depends upon the roof type.

Figure 4 Aligning top and bottom tube assemblies

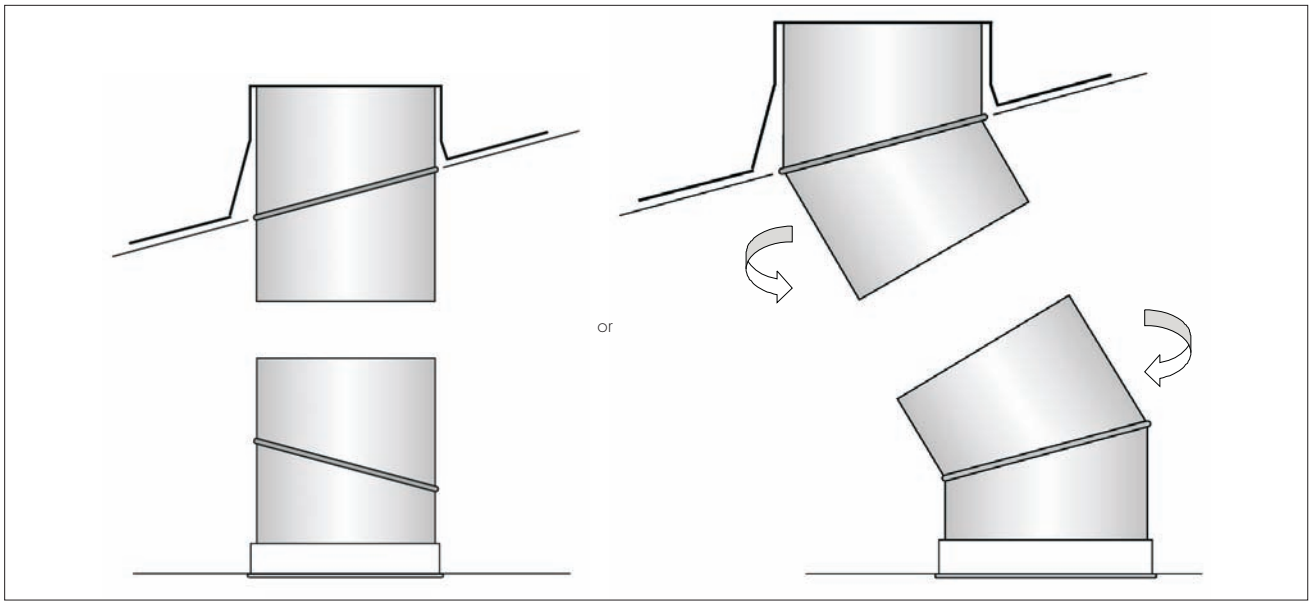

Figure 5 Installation of bottom tube assembly

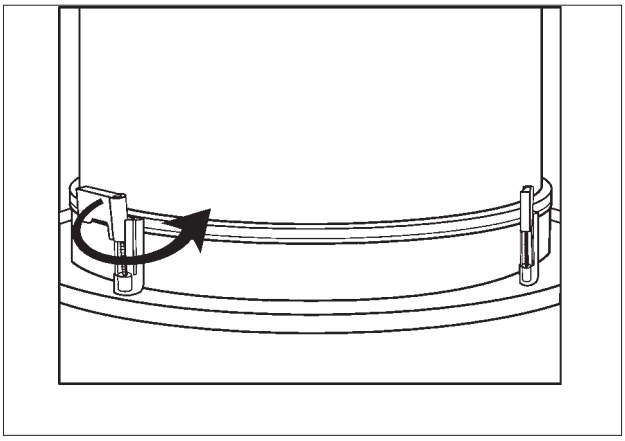

Flat roof flashing

- the centre point above the hole cut in the ceiling is located and marked with a nail or screw. The area where the flashing will be located is cleared away thoroughly ensuring the surface under the flashing and 75 mm beyond the edge is smooth, level, clean and dry
- a series of eight 5 mm diameter holes are drilled around the edge of the flashing base between the eight existing holes
- after marking the points of the holes and the outer edges of the flashing, cuts are made through the roof deck 20 mm inside the inner marked line
- sealant is applied onto the outer edge of the flashing and around the hole in the roof and the flashing lowered into position. The flashing is fastened to the roof using 50 mm flashing screws, taking care not to overtighten (see Figure 6). Sealant is finally applied to the outer edge of the flashing and to all flashing screw heads

Slate and plain tile flashing

- an area of roof tiles are removed, enough to allow the top and aperture of the flashing to be placed onto the roof battens, leaving sufficient tiles at the bottom edge to allow the flashing to overlap sufficiently onto the tiles below
- any obstructing battens are cut if necessary and the roof felt is cut through in a star shape so the felt can be folded upwards and back on itself. The flashing is placed over the hole and the tube of the top tube assembly temporarily inserted and angled towards the bottom tube assembly in the ceiling
- the top of the flashing is secured with flashing screws to the appropriate batten and sealant applied to the top of each fixing screw head. Sealant is also applied to the side sections of the flashing onto which the tiles will be re-laid
- sealant is applied to the bottom edge of the flashing, between the flashing and the tiles underneath, and across the top edge of the flashing. Roof tiles are re-laid and fixed to the sides and top of the flashing ensuring a 40 mm gap exists behind the flashing upstand to allow the top tube assembly, dome ring and dome to be inserted into the flashing upstand (see Figure 7).

Figure 6 Flat roof flashing installation

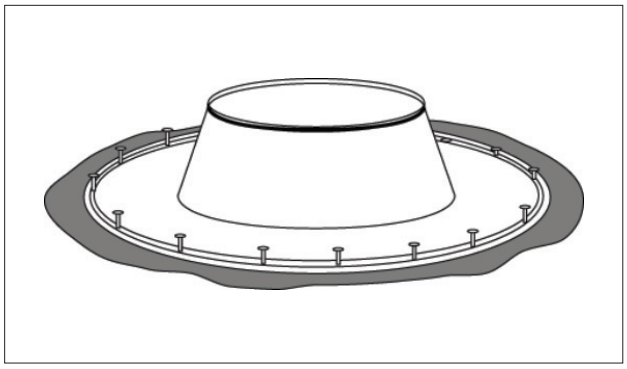

Figure 7 Slates and tile flashing installation

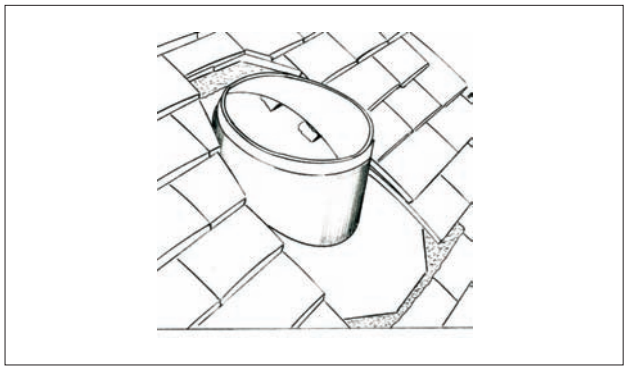

Interlocking tile flashing

- an area of roof tiles are removed, enough to allow the top and aperture of the flashing to be placed onto the roof battens, leaving sufficient tiles at the bottom edge to allow the flashing to overlap sufficiently onto the tiles below
- any obstructing battens are cut if necessary and the roof felt is cut through in a star shape so the felt can be folded upwards and back on itself. The flashing is placed over the hole and the tube of the top tube assembly temporarily inserted and angled towards the bottom tube assembly in the ceiling
- the top of the flashing is secured with flashing screws to the appropriate batten and hand-pressure applied to the bottom edge of the flashing over the shape of the tiles beneath it. The left and right edges of the flashing are turned up to ensure water does not ingress (see Figure 8)
- aluminium 'L' brackets are fitted to the tiles to secure the lower end of the flashing. Tiles are re-laid ensuring a 40 mm gap is left behind the upstand to allow the top tube assembly, dome ring and dome to be inserted into the flashing upstand. Finally the top of the flashing is moulded by hand as necessary to fit the underside shape of the tiles (see Figure 9).

Figure 8 Securing the interlocking tile flashing

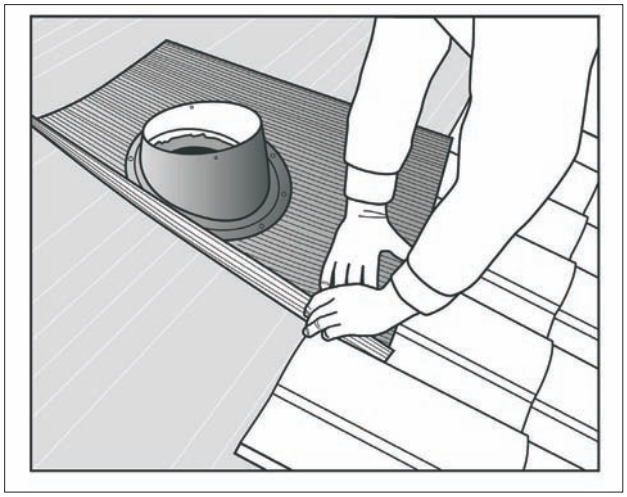

Figure 9 Interlocking tile flashing installation

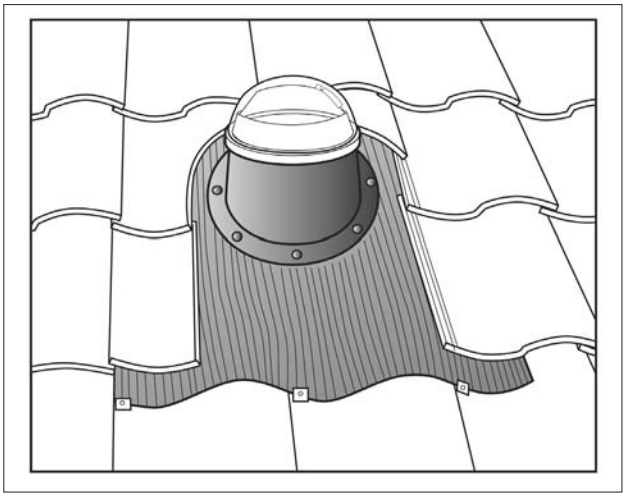

14.5 The top tube assembly is inserted into the roof flashing from the outside. Metal roof flashings have pre-drilled holes. The dome ring fixing holes align with these holes and dome screws are screwed through to the flashing to hold the top tube assembly temporarily in place.

14.6 Angle adaptors are rotated so that the top tube assembly points towards the bottom tube assembly in the ceiling. The lengths 'L1' and 'L2' (see Figure 10) should be equal to ensure alignment[1].

(1) For flat/vaulted ceiling applications where no extension tubes are required, the bottom tube assembly will be fitted up inside the top tube assembly.

14.7 The top tube assembly is unscrewed and the angle adaptor joint and tube seams are taped with the foil tape supplied by the Certificate holder.

14.8 The protective lining film is removed from the inside of the tube and the top tube assembly replaced back into the roof flashing, again aligning it with the bottom tube assembly. The assembly is securely fastened to the flashing using the dome screws

14.9 A special LightTracker[1] reflector is placed in the north side of the dome, with the reflective side facing due south. The holes in the reflector are aligned with moulded tabs inside the dome and snapped into place. The protective film is removed from the reflector.

(1) Registered trademark.

Figure 10 Showing equal alignment of top and bottom tube assemblies

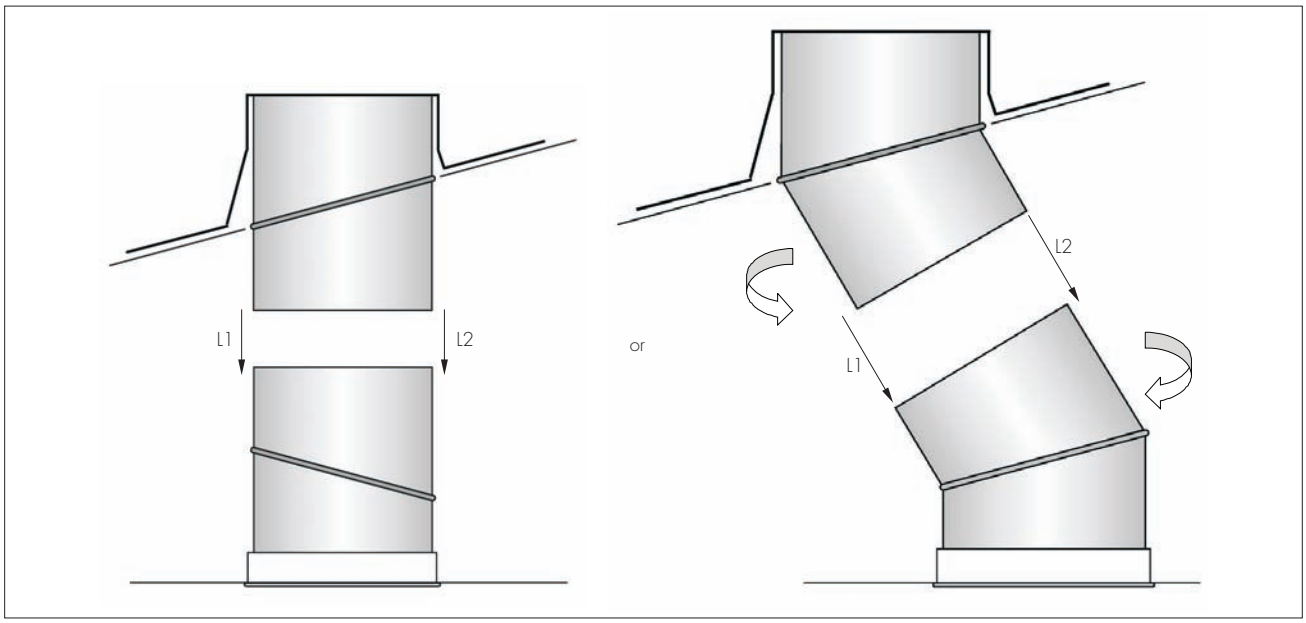

14.10 Ensuring the LightTracker reflector in the dome is facing due south, the four tabs on the dome base are aligned with the snaps on the dome ring and firmly pressed down to click into place.

14.11 An expansion joint seal is applied 25 mm from the top edge of the bottom tube assembly for short installations without extension tubes or 25 mm from the top edge of the uppermost extension tube for longer installations.

14.12 Final adjustments are made to align the bottom tube assembly with any extension tubes to the upper ceiling assembly and then all four twist-lock fastening clamps are locked into place to fasten securely into the ceiling. The protective film is removed from the inside of the bottom tube assembly and the extension tubes.

14.13 The ceiling diffuser is fitted to the opening of the bottom tube assembly, applying firm upward pressure until it snap fits into position. The diffuser is held in place by an interference fit in the bottom tube assembly and can be removed if required by pulling down on the outside of the white dress ring.

Technical Investigations

15 Tests

Tests were carried out on the Solatube 160DS and 290DS Daylighting Systems to determine:

- watertightness
- effect of impacts
- suitability of materials
- effect of wind loads
- light transmission and haze
- reflectance
- effect of snow loads
- loss of light due to bending
- specular gloss.

16 Investigations

16.1 The manufacturing process was examined, including the methods adopted for quality control, and details were obtained relating to the quality and composition of the materials.

16.2 A site visit was conducted to establish the system's performance and durability in service.

16.3 Existing data was examined in relation to performance in fire.

16.4 The rooflight U value and risk of condensation was evaluated.

Bibliography

BS 6399-2 : 1997 *Loading for buildings — Code of practice for wind loads*
BS 6399-3 : 1988 *Loading for buildings — Code of practice for imposed roof loads*
BS EN ISO 2813 : 2000 *Paints and varnishes — Determination of specular gloss of non-metallic paint films at 20 degrees and 85 degrees*
BS EN ISO 10211-1 : 1996 *Thermal bridges in building construction — Heat flows and surface temperatures — General calculation methods*
BS EN ISO 10211-2 : 2001 *Thermal bridges in building construction — Calculation of heat flows and surface temperatures — Linear thermal bridges*
ASTM D 1003 : 2000 *Test Method for Haze and Luminous Transmittance of Transparent Plastics*
EN ISO 13788 : 2001 *Hygrothermal performance of building components and building elements—Internal surface temperature to avoid critical surface humidity and interstitial condensation — Calculation methods*

17 Conditions

17.1 This Certificate:

- relates only to the product/system that is named and described on the front page
- is granted only to the company, firm or person named on the front page — no other company, firm or person may hold or claim any entitlement to this Certificate
- is valid only within the UK
- has to be read, considered and used as a whole document — it may be misleading and will be incomplete to be selective
- is copyright of the BBA
- is subject to English law.

17.2 References in this Certificate to any Act of Parliament, Statutory Instrument, Directive or Regulation of the European Union, British, European or International Standard, Code of Practice, manufacturers' instructions or similar publication, are references to such publication in the form in which it was current at the date of this Certificate.

17.3 This Certificate will remain valid for an unlimited period provided that the product/system and the manufacture and/or fabrication including all related and relevant processes thereof:

- are maintained at or above the levels which have been assessed and found to be satisfactory by the BBA
- continue to be checked as and when deemed appropriate by the BBA under arrangements that it will determine
- are reviewed by the BBA as and when it considers appropriate.

17.4 In granting this Certificate, the BBA is not responsible for:

- the presence or absence of any patent, intellectual property or similar rights subsisting in the product/system or any other product/system
- the right of the Certificate holder to manufacture, supply, install, maintain or market the product/system
- individual installations of the product/system, including the nature, design, methods and workmanship of or related to the installation
- the actual works in which the product/system is installed, used and maintained, including the nature, design, methods and workmanship of such works.

17.5 Any information relating to the manufacture, supply, installation, use and maintenance of this product/system which is contained or referred to in this Certificate is the minimum required to be met when the product/system is manufactured, supplied, installed, used and maintained. It does not purport in any way to restate the requirements of the Health & Safety at Work etc Act 1974, or of any other statutory, common law or other duty which may exist at the date of this Certificate; nor is conformity with such information to be taken as satisfying the requirements of the 1974 Act or of any statutory, common law or other duty of care. In granting this Certificate, the BBA does not accept responsibility to any person or body for any loss or damage, including personal injury, arising as a direct or indirect result of the manufacture, supply, installation, use and maintenance of this product/system.

British Board of Agrément
Bucknalls Lane
Garston, Watford
Herts WD25 9BA

tel: 01923 665300
fax: 01923 665301
e-mail: mail@bba.star.co.uk
website: www.bbacerts.co.uk

©2008